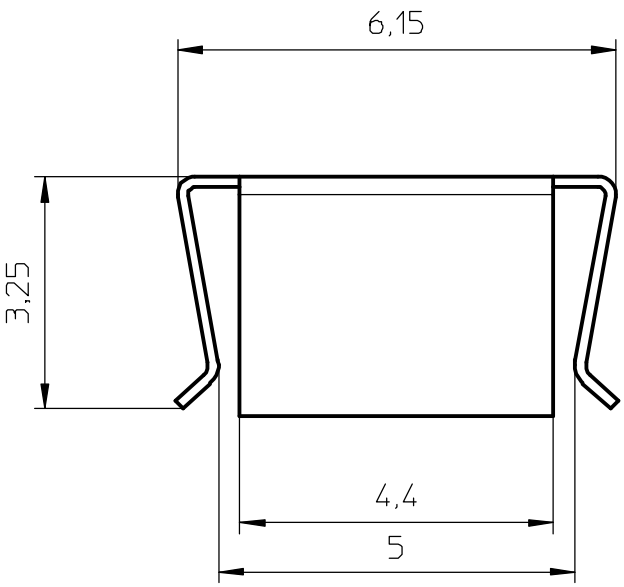

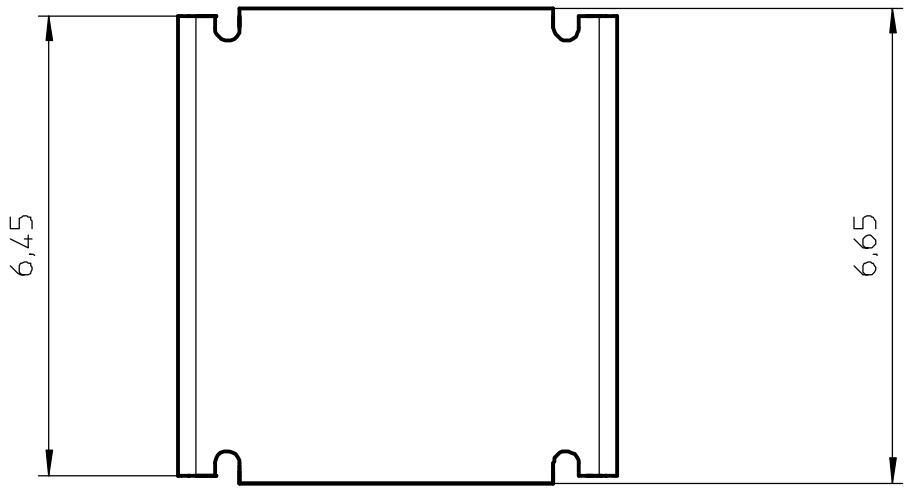

Material: CrNi steel thickness 0,10 mm.

CLASS NO.	CLI-EP5/6	4322 021 03631	01-08-06
NAME NAAM: M.Veekens	SUPERS. VERV.	1 SH SH BL BL 112 – 001	010	A4
MPA	CHECK CONTR.	DAT. 00-08-17	Property of Eigendom van	© FERROXCUBE 2000