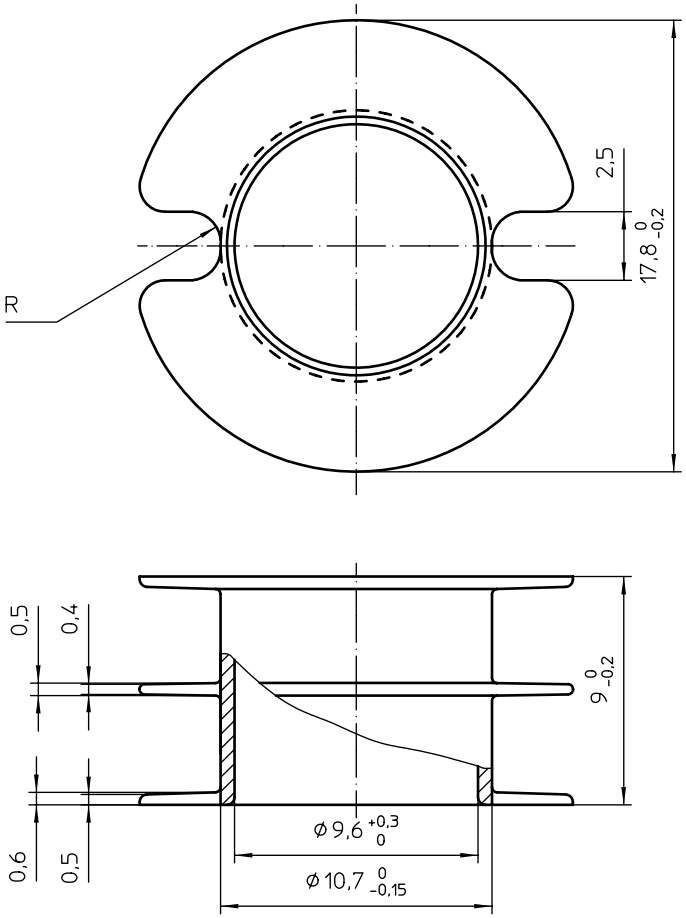

Coil former material: Valox 420SEO (PBT), glass-reinforced.
UL file number: E45329 - UL94V-0.
Max. operating temp.: acc. to IEC 60 085 class F, 155°C.
Min. winding area: 24,5 mm².
Mean length of turn: 44,5 mm.

CLASS.NO.	CP-P22/13-2S	4322 021 02421	~~97-08-22~~ 00-07-07
00-07-07			

NAME NAAM	M.Veekens	SUPERS. VERV.	4322 021 30312	1	SHEET BLAD 112 – 001	010	A4
MPA		CHECK CONTR.	DAT. 97-08-22	Property of Eigendom van	© FERROXCUBE 2000		