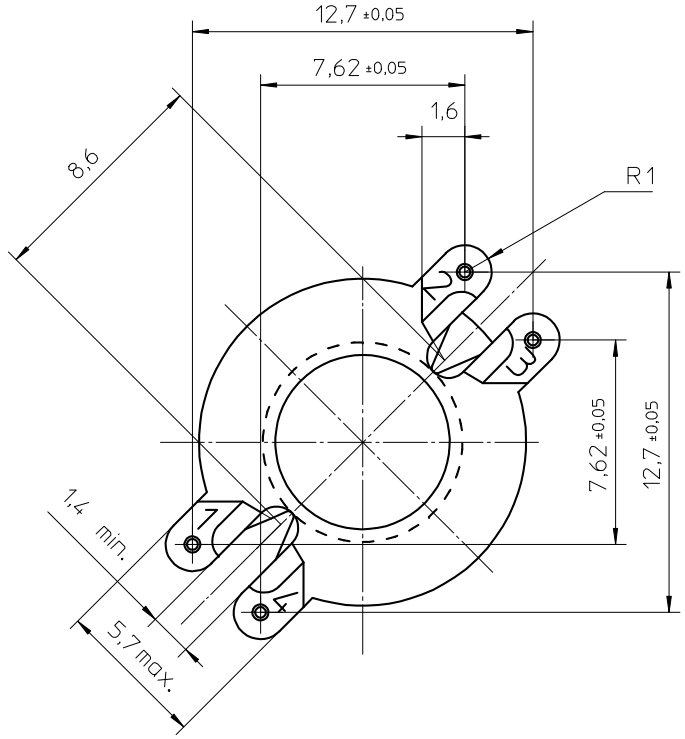

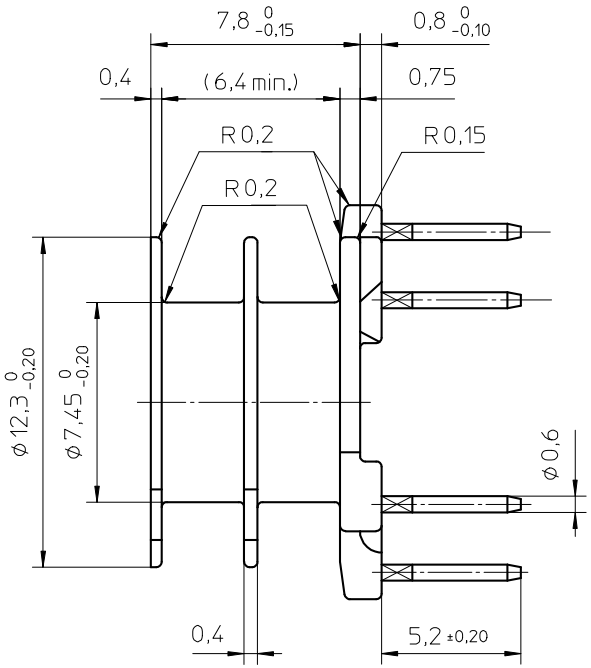

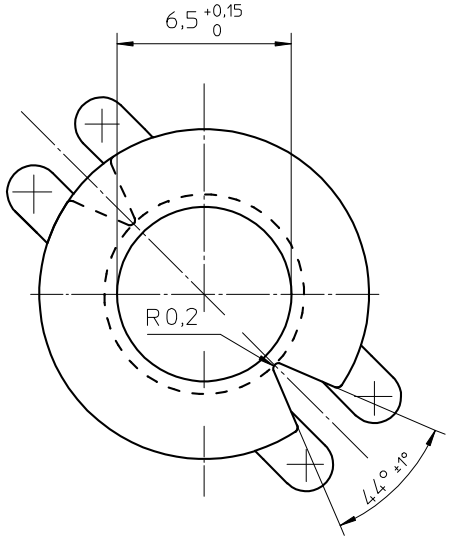

HOLE PATTERN:

Space requirement 6x6 pitch.

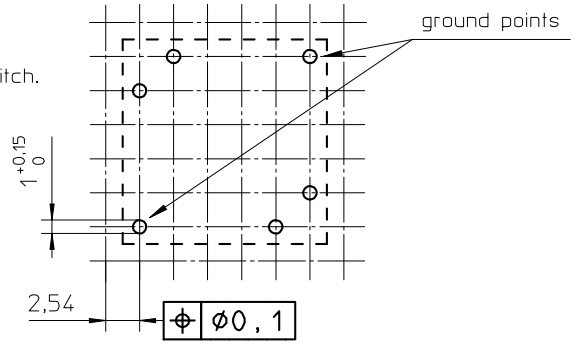

Coil former material:	Sumikon PM-9630 (PF), glass-reinforced. UL file number: E41429 - UL94V-0.
Pin material:	CuSn - Ni flash, Sn plated.
Max. operating temp.:	acc. to IEC 60 085 class H, 180°C.
Resistance to soldering heat:	acc. to IEC 60 068-2-20 Part 2, Test Tb, method 1B, 350°C-3,5s.
Solderability:	acc. to IEC 60 068-2-20 Part 2, Test Ta, method 1, 235°C-2s.
Min. winding area:	14 mm^2.
Mean length of turn:	30 mm.

CLASS.NO.	CSV-RM6S/R-2S-4P-IZ		4322 021 06901		07-11-08
NAME NAAM	A.Wojtasz	SUPERS. VERV.	1 SH BL. SH BL. 112 – 001	010	A3
MPA		CHECK CONTR.	DAT. 07-11-08	Property of Eigendom van	© FERROXCUBE 2007